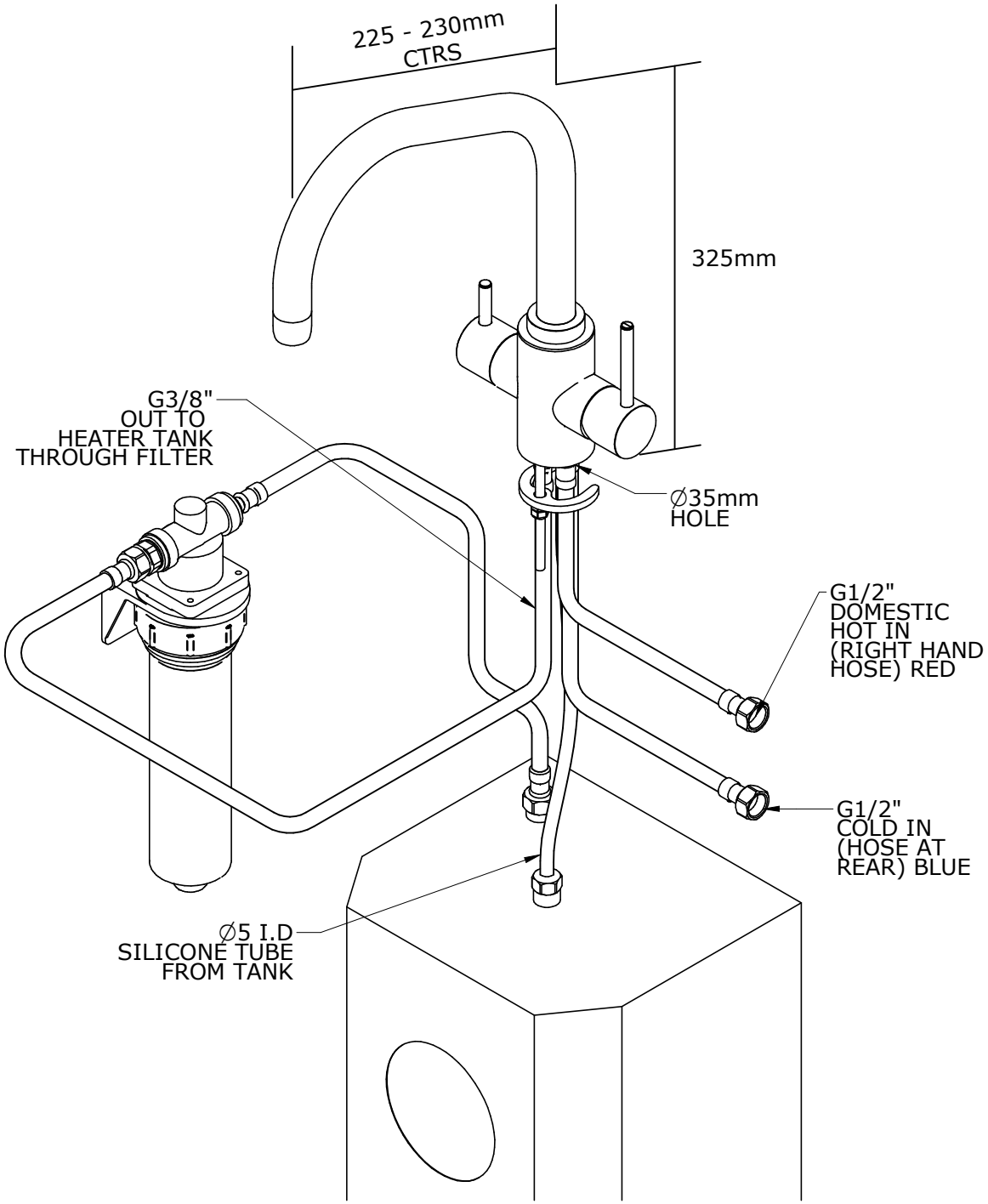
225 - 230mm
CTRS
325mm
G3/8"
OUT TO
HEATER TANK
THROUGH FILTER
∅35mm
HOLE
G1/2"
DOMESTIC
HOT IN
(RIGHT HAND
HOSE) RED
G1/2"
COLD IN
(HOSE AT
REAR) BLUE
∅5 I.D
SILICONE TUBE
FROM TANK